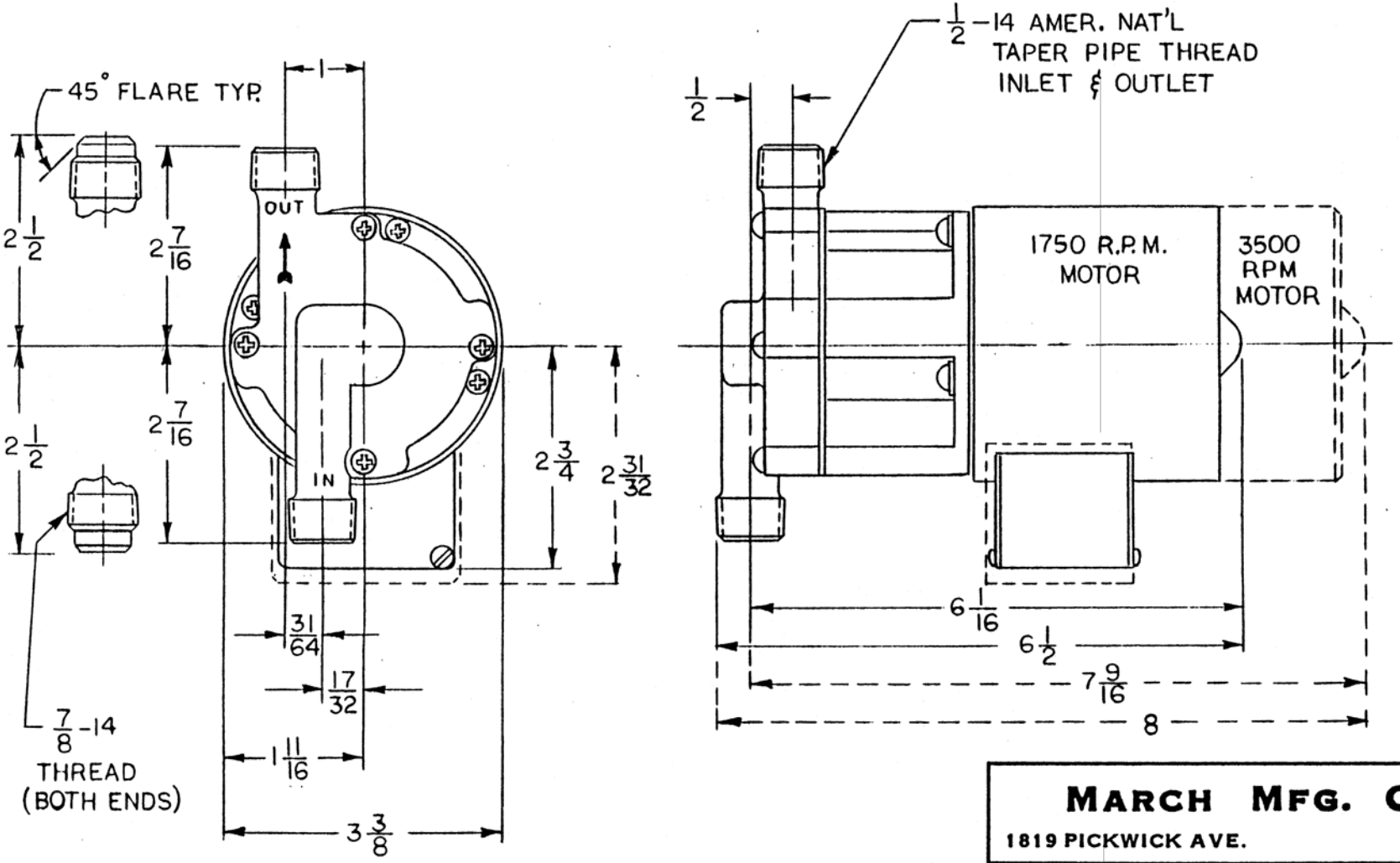

(A) CONDUIT BOX OF 3500 RPM MOTOR (FASCO) RE-LOCATED FROM REAR TO FRONT OF MOTOR 8-11-82 J.T.

QTY.	USED ON ASSEM.

MARCH MFG. COMPANY

1819 PICKWICK AVE. GLENVIEW, ILL.

PART NAME PUMP ASSEMBLY 809 & 809 HS		
MATERIAL		
HEAT TRMT.	SCALE	QTY. REQ.
FINISH	DRAWN HWZ	DATE 3-10-82
UNLESS OTHERWISE NOTED TOLERANCE ON FRACTIONS ± 1/64 TOLERANCE ON DECIMALS ± .005	CHECKED	
	APPROVED	
PART NUMBER 809-064-01	809-058-01	

THIS DOCUMENT DISCLOSED SUBJECT MATTER IN WHICH MARCH MFG. CO. HAS PROPRIETARY RIGHTS. NEITHER RECEIPT NOR POSSESSION THEREOF CONFERS OR TRANSFER ANY RIGHT TO REPRODUCE OR DISCLOSE THE DOCUMENT, ANY PART THEREOF, ANY INFORMATION CONTAINED THEREIN, OR ANY PHYSICAL ARTICLE OR DEVICE OR TO PRACTICE ANY METHOD OR PROCESS, EXCEPT BY WRITTEN PERMISSION FROM OR WRITTEN AGREEMENT WITH MARCH MFG. CO.