IANGES
(B) REDRAWN 10-7-93 J.T.

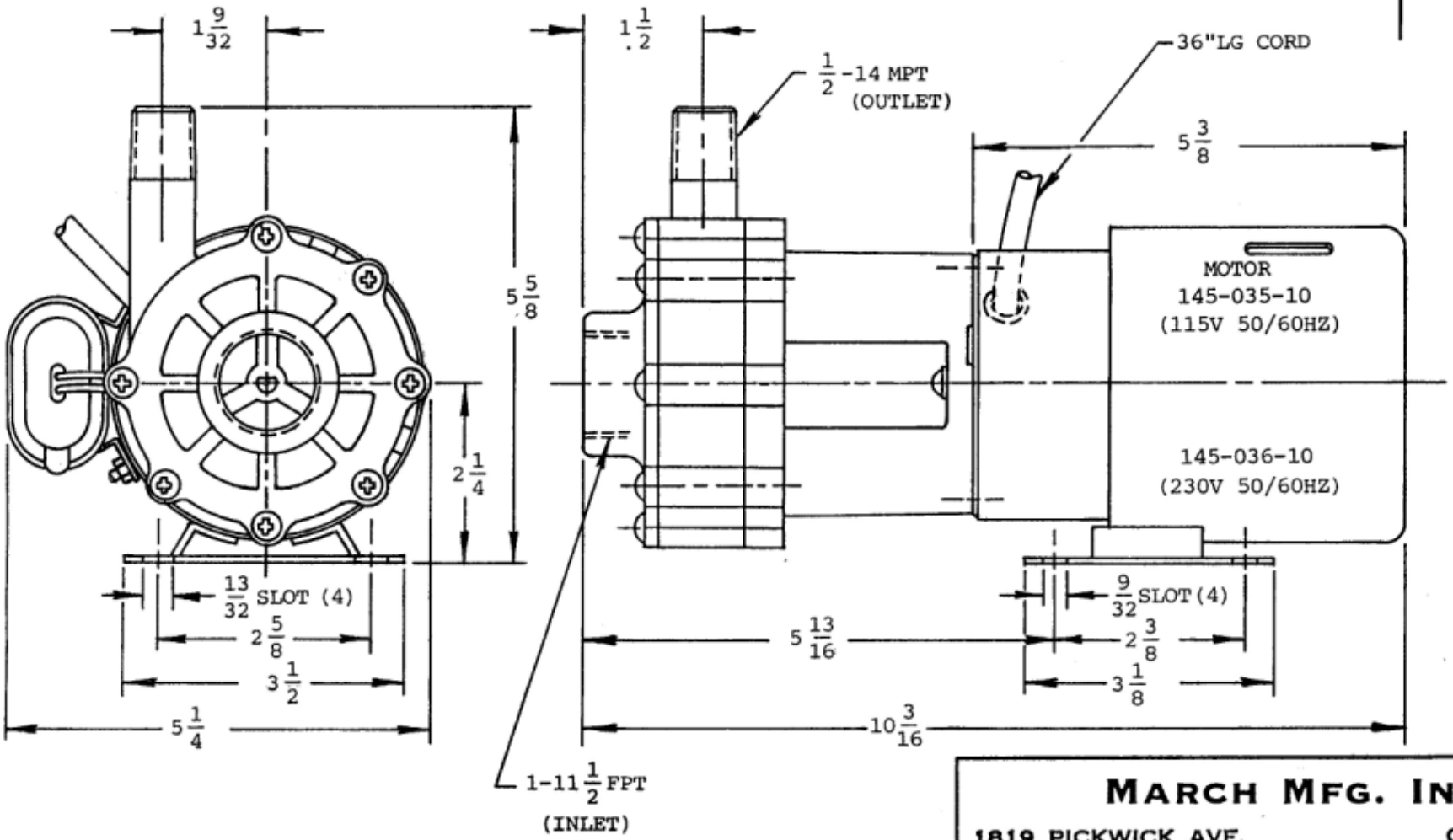

MODEL	ASSEMBLY No.	
BC-4C-MD	145-010-04	(115V)
BC-4C-MD	145-010-05	(230V)
(KYNAR) BC-4K-MD	145-010-08	(115V)
(KYNAR) BC-4K-MD	145-010-09	(230V)

THIS DOCUMENT DISCLOSED SUBJECT MATTER IN WHICH MARCH MFG. INC. HAS PROPRIETARY RIGHTS. NEITHER RECEIPT NOR POSSESSION THEREOF CONFERS OR TRANSFER ANY RIGHT TO REPRODUCE OR DISCLOSE THE DOCUMENT, ANY PART THEREOF, ANY INFORMATION CONTAINED THEREIN, OR ANY PHYSICAL ARTICLE OR DEVICE OR TO PRACTICE ANY METHOD OR PROCESS, EXCEPT BY WRITTEN PERMISSION FROM OR WRITTEN AGREEMENT WITH MARCH MFG. INC.

MARCH MFG. INC.

1819 PICKWICK AVE. GLENVIEW, IL.

PART NAME	PUMP ASSEMBLY	BC-4C-MD BC-4K-MD	
MOTOR: FASCO			
HEAT TRMT.		SCALE 1/2"=1"	QTY. REQ. 1
FINISH		DRAWN JT/HZ	DATE 10-7-93
UNLESS OTHERWISE NOTED TOLERANCE ON FRACTIONS ± TOLERANCE ON DECIMALS ±		CHECKED	
		APPROVED	
PART NUMBER	145 SERIES		